Ready2Talk®

PA 62

Installation & Operation Manual

Value and Performance

The Classic PA Design
Updated!

IMPORTANT!

Please read ALL these key points to ensure the proper connection and use of your PA 62. If you have ANY questions, please contact us at 1 888 724-5351 BEFORE proceeding!

The PA 62 should be installed by a professional installer, service mechanic, vehicle manufacturer or dealer. **Do not attempt to install the PA 62 without confirming compatibility with your vehicle manufacturer or authorized dealer.** Failure to do so may cause damage to you, the PA 62, your vehicle electrical system and possibly void your vehicle warranty.

The PA 62 is an amplifier with a microphone input and is designed to be connected between the stereo's output and the vehicle's speakers.

The PA 62 is designed to use speaker loads between 4 and 8 Ohms ONLY! Use of 2 Ohm speaker load will cause excessive heat and with continued use, cause amplifier failure! (Please refer to pages 5 to 8 for the "Multi Speaker Connection Diagrams")

Although the PA 62 is internally fused always ensure your power wires are fused at the power source, (to protect the wires from shorts).

If you are not 100% sure about the installation or application of the PA 62 for your needs, please contact us at 1 888 724-5351. We are happy to answer ANY questions!

Ready2Talk (Double E Products Ltd.) is not responsible for any damage caused by misconnection, misuse or abuse of any *Ready2Talk* products.

Ready2Talk Limited Warranty

2 Year Limited Warranty on all PA Systems
1 Year Limited Warranty on all Cables and Microphones

Now that the important warnings are out of the way… the fun stuff.

Sometimes all you need is a basic PA with 1 x mic input socket that connects to any stereo and cuts off the music when the mic is on.

The PA 62 is a "Pass Through" system and the stereo sound passes through the PA to the speakers, so the stereo's fader control works as normal. But when the mic is on, the internal class D amp activates and offers a great sounding PA.

We realize your focus is on the customers in the rear, so the PA 62 has a PC board mounted adjustment pot to pre-set that focus to the rear speakers.

It comes with standard installation cables, but if you have a factory stereo, please use one of our *Ready2Talk* "Plug and Play" installation T harnesses. That means the installation now takes minutes without cutting wires!

And because it's a *Ready2Talk* you can use any of our microphones, from handheld to headset, wired and wireless. Start with a wired mic today and upgrade to a wireless mic tomorrow. Just plug it in and go.

The PA 62 is also part of our Intercom Series. When using our Link Cable, connect 2 x PA 62 together and now you have a standalone 2 Way Intercom with separate volume controls, perfect for ambulances and people carriers.

Mount it on any flat surface vertical or horizontal, even upside-down and with the included front decal, the printing will always be the right way around. We try to think of everything.

The PA 62 is the perfect, simple PA system for Vans or Busses for Sightseeing, Shuttle, Transit, School Bus, Church Busses, Retirement Homes, People Movers, Trams, Boats, Trolleys, Snow Cats and Horse Carriages or a replacement PA for many older Highway Coaches.

We also offer installation diagrams for Multi Trailer Trams.

Thanks again for choosing your *Ready2Talk* PA 62 and please give us a call if you have ANY questions about connection or operation!
1 888 724-5351

PA 62 Wiring Codes

12V + Battery	Yellow - Constant power - 10 Amp fuse in socket base
12V + Switched	Red - Acc. power - Internal automatic re-settable fuse
12V – Ground	Black - Ground
Right Front +	Gray
Right Front -	Gray / Black
Left Front +	White
Left Front -	White / Black
Right Rear +	Purple
Right Rear -	Purple / Black
Left Rear +	Green
Left Rear -	Green / Black

Connection to a Factory Stereo using a *Ready2Talk* Installation T Harness.

Make your installation simple with our unique "Plug and Play" T Harnesses, available for most vans and buses that come with factory stereos.

Connection is as simple as, removing the stereo from the dash, unplugging the master plug from the stereo, plugging in the T Harness, mounting the PA 62 and in some cases, connecting an accessory power wire to the fuse box. Done!

Please visit www.ready2talk.com for the complete list of applicable vehicles.

Connection to an Aftermarket Stereo using Speaker Wires

Using the master cable and RCA pigtails included in the box.

- One by one, cut all 8 x speaker wires from your stereo and reconnect to the same coloured output wires on the PA 62 master plug. Gray to gray, gray/black to gray/black, green to green, etc.
- Connect all 8 x RCA pigtail wires to the same coloured stereo output wires. Gray to gray, gray/black to gray/black, green to green, etc.
- Plug the pigtail RCA connectors into the RCA input sockets on the PA 62.
- Now your stereo's sound will flow through the PA 62 to your speakers.
- Connect the yellow power wire to a constant 12V / 10A power source.
- Connect the red power wire to an accessory 12V / 1A power source.
- Connect the black ground wire to a reliable ground source.

Note: **DO NOT EXCEED a 4 – 8 Ohm speaker load!** If speaker load is outside intended range (e.g. 2 Ohms), the PA 62 could blow the 10A power fuse protecting itself. Please ensure your speakers are not common grounded or connected to the vehicle ground as damage will occur. These two faults are not covered by warranty. When in doubt, please call 1 888 724-5351.

Note: To lower the stereo's front speaker output, adjust the stereo's fader.

Note: To lower the PA's front speaker output see, "Fine Adjustment" on page 8.

Multi Speaker Connection Diagrams

Note: All Multi Speaker Connection Diagrams are listed below are drawn using 4 Ohm speakers and these diagrams will offer a safe load range from 4 – 8 Ohm.

Standard 4 Speaker Option

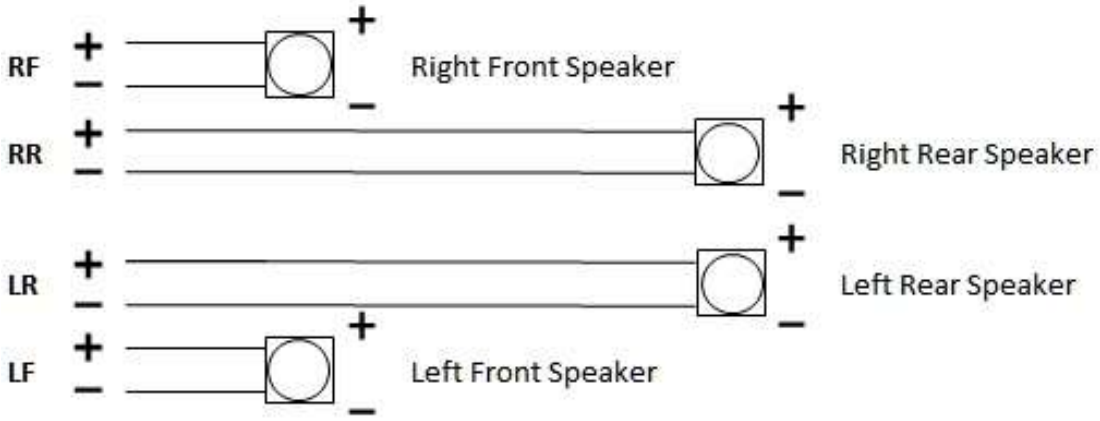

6 Speaker Option with Door Speakers

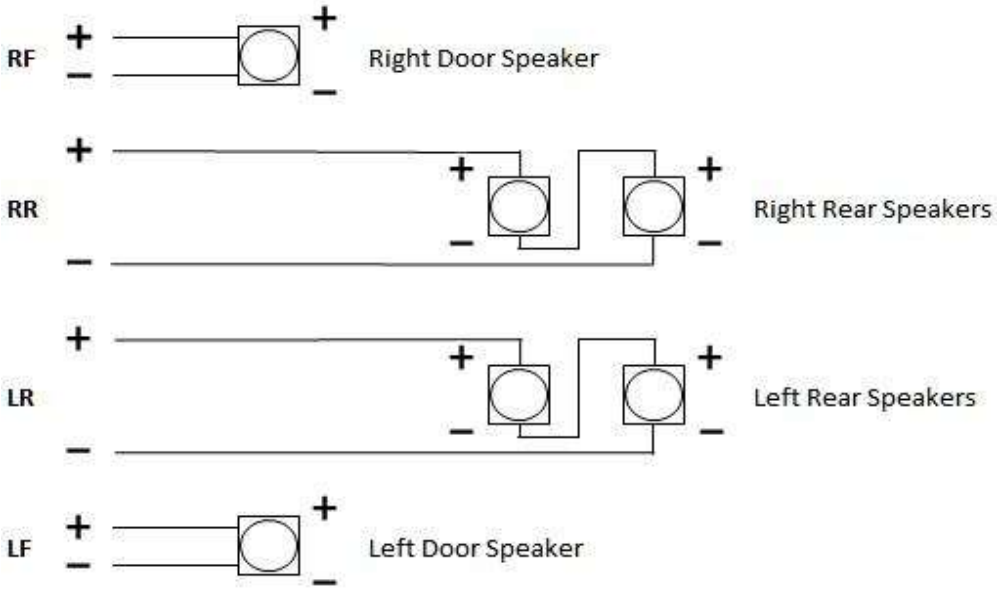

8 Speaker Option with Door Speakers

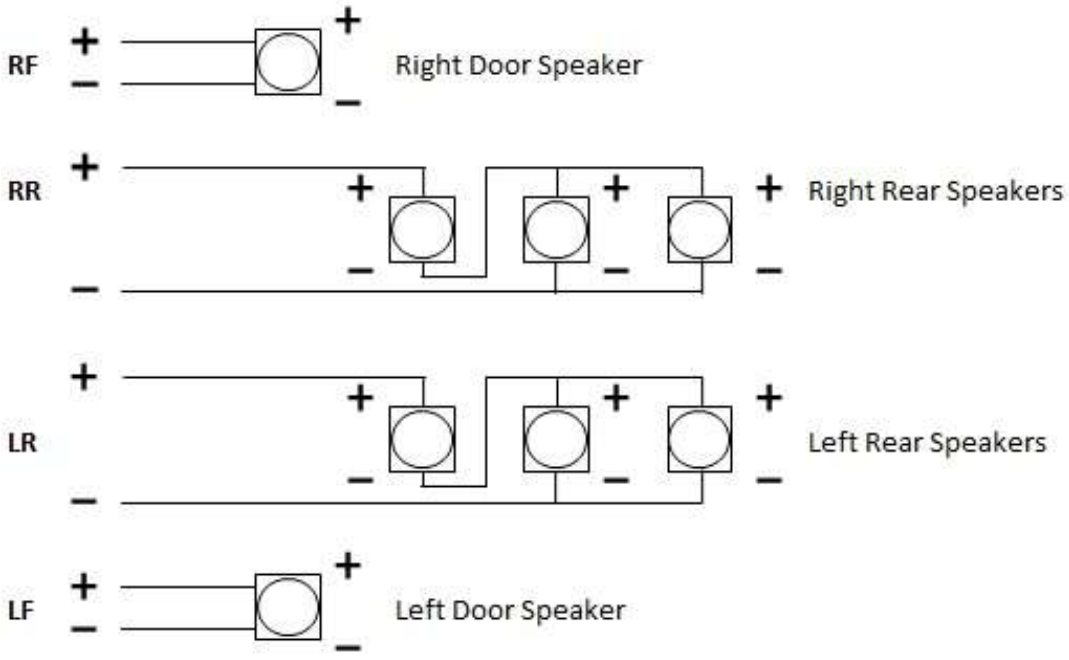

8 Speaker Options

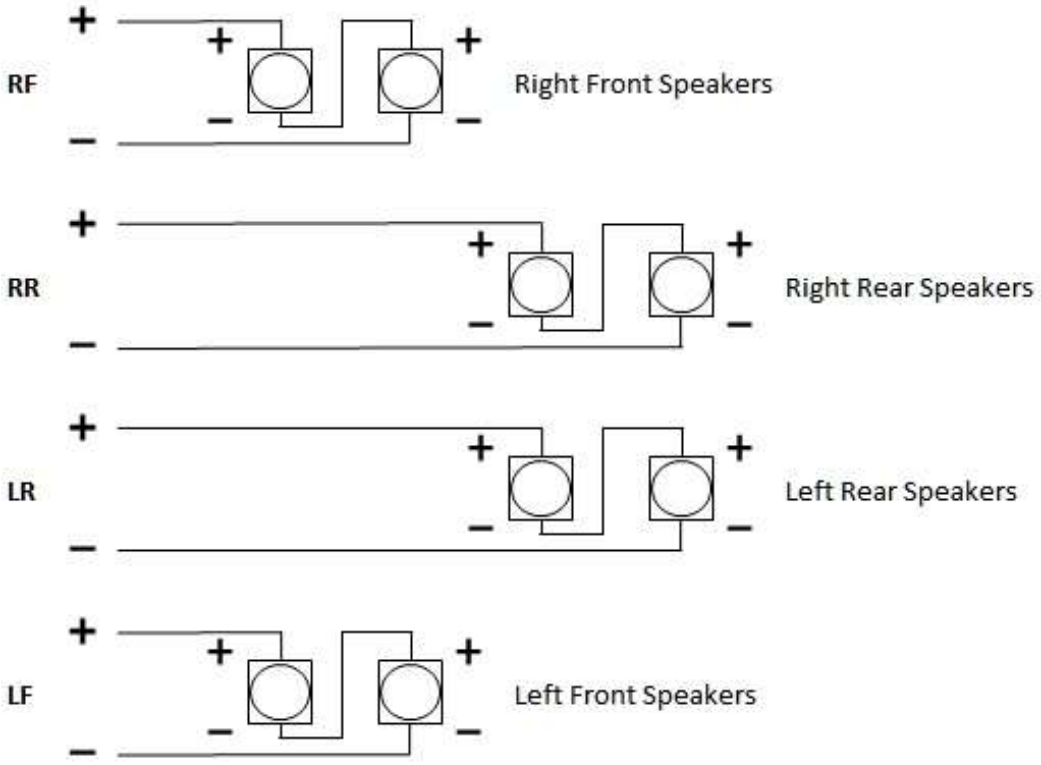

10 Speaker Option with Door Speakers

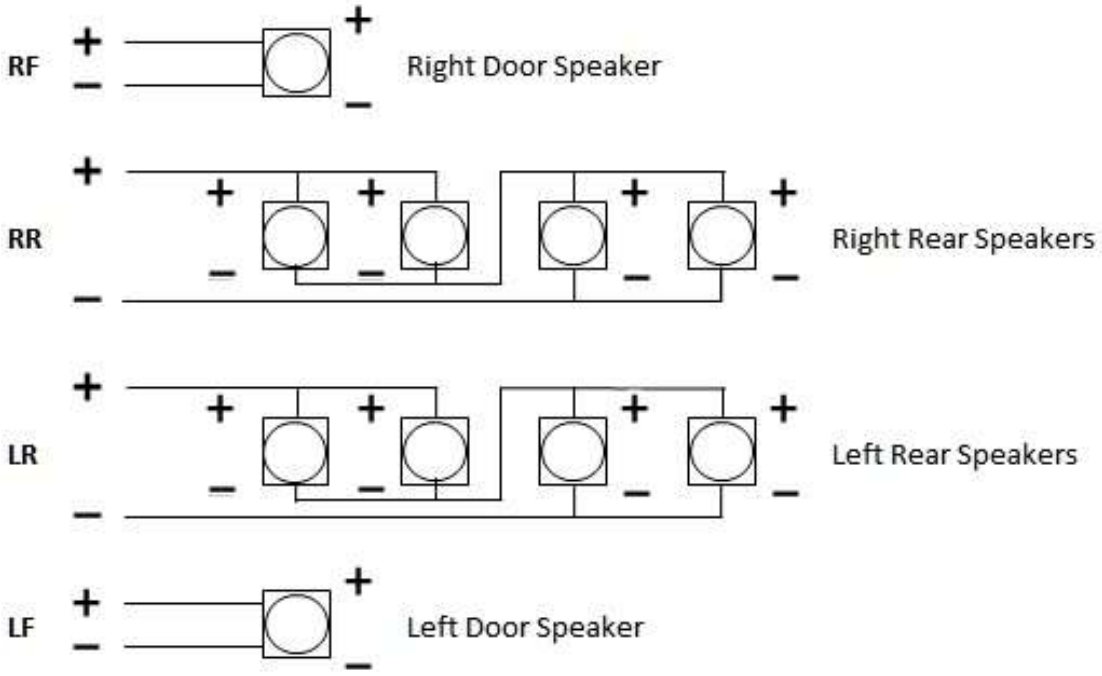

12 Speaker Option

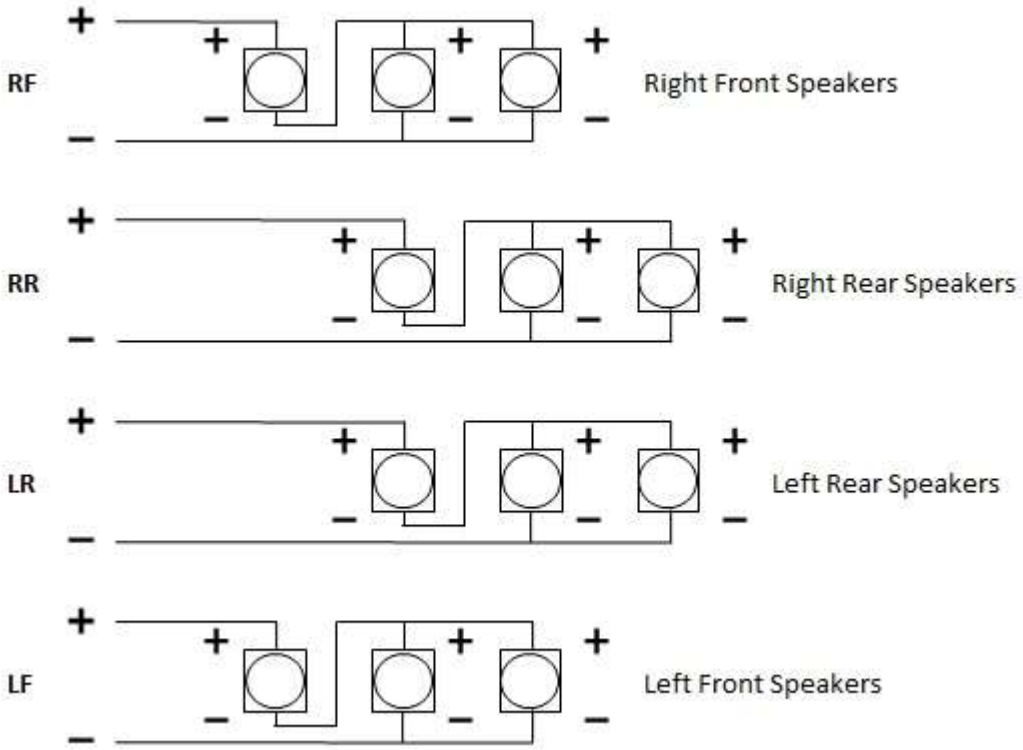

16 Speaker Option

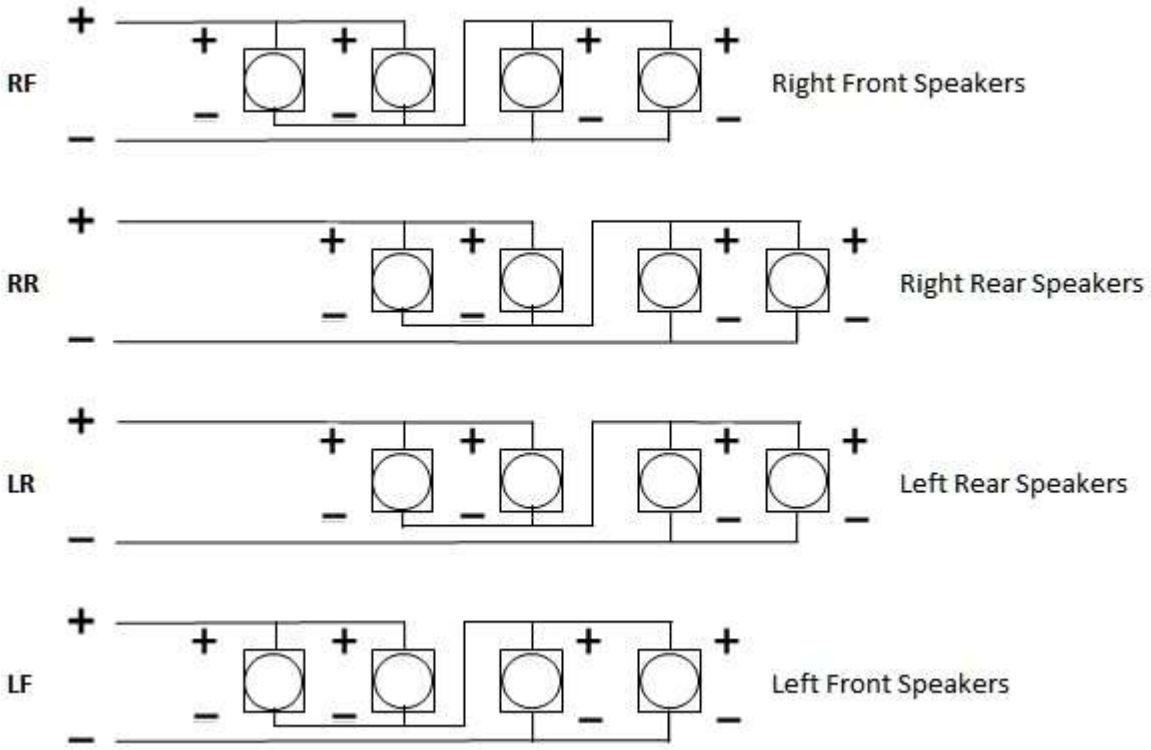

PA 62 Start Up and Initial Testing

1. Turn on vehicle's stereo and play music.
2. Turn on the mic, the stereo will cut off and the mic will be heard.
3. Adjust the mic volume on the PA 62 to your desired level.
4. Turn off the mic and the stereo will come back on.

Fine Adjustments - See Image 1 to access these adjustments, remove top 2 x screws on both front and rear plates, then remove the top cover.

Front Speaker Adjustment: This allows the installer to lower the PA volume of the front speakers compared the rear speakers. It's pre-set at fully clockwise for full front speaker volume. To reduce, turn the adjustment counterclockwise.

Note: To adjust the stereo front speaker's volume, adjust the stereo's fader.

Mic Gain: Normally the mic gain is never adjusted. Should you need to adjust; to increase turn the pot clockwise, to reduce turn counterclockwise. Make small adjustments while talking (e.g. 1/8th turn) and then re-test.

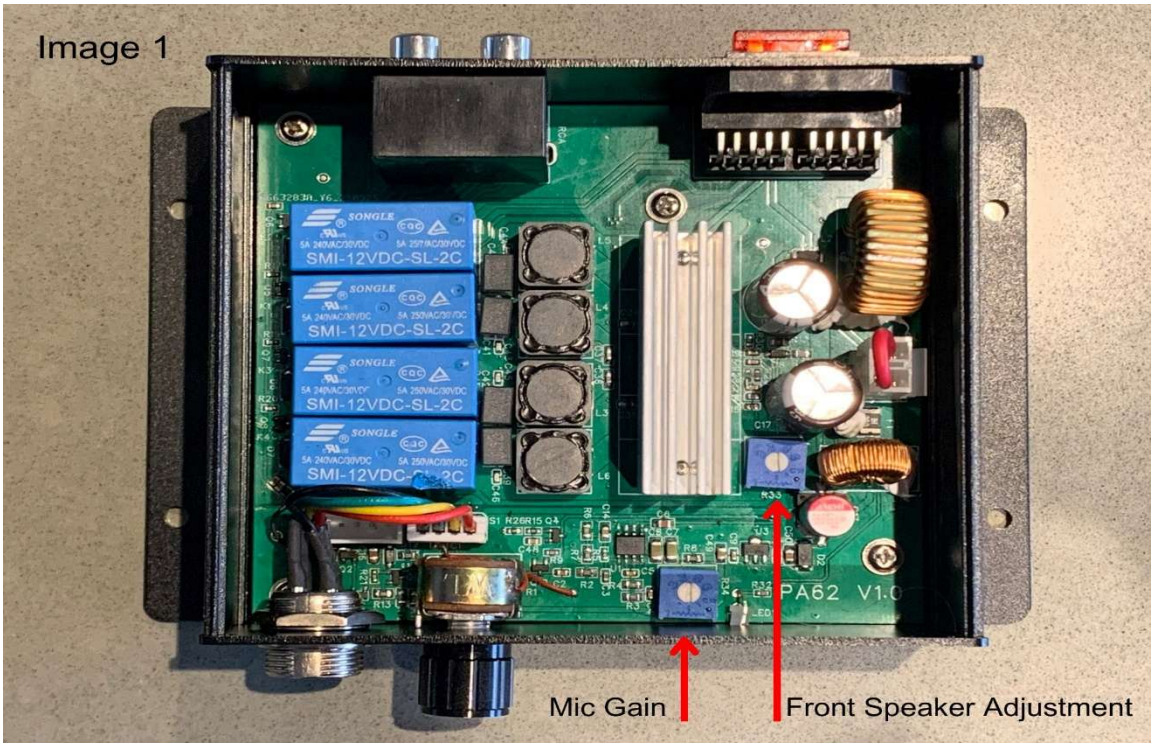

PA 62 Specifications

Speaker RCA Input	Pass through
Microphone Input	100mV
Current Drain (Max) 12V Constant Power (Yellow Wire)	10Amp
12V Switched Power (Red Wire)	250mA
Current Drain at Normal Volumes	2.5Amp
Standby Current Drain	30mA
Power Output (Using 4 Ohm Speakers)	4 x 30 Watts
Case Measurements (Including Flange)	H 1-5/8″ x W 5-5/8″ x D 4-1/8″ H 42mm x W 143mm x D 105mm
Front Panel Measurements (Without Flange)	H 1-5/8″ x W 4-5/8″ x D 4-1/8″ H 42mm x W 118mm x D 105mm

Manufactured for

Double E Products Ltd.
Box 16118 / 1199 Lynn Valley Rd
North Vancouver BC V7J 3S9 Canada
1 888 724-5351

www.ready2talkpa.com ***info@ready2talkpa.com***