Ready2Talk®

PA 64 Ver. 2.5

Installation & Operation Manual

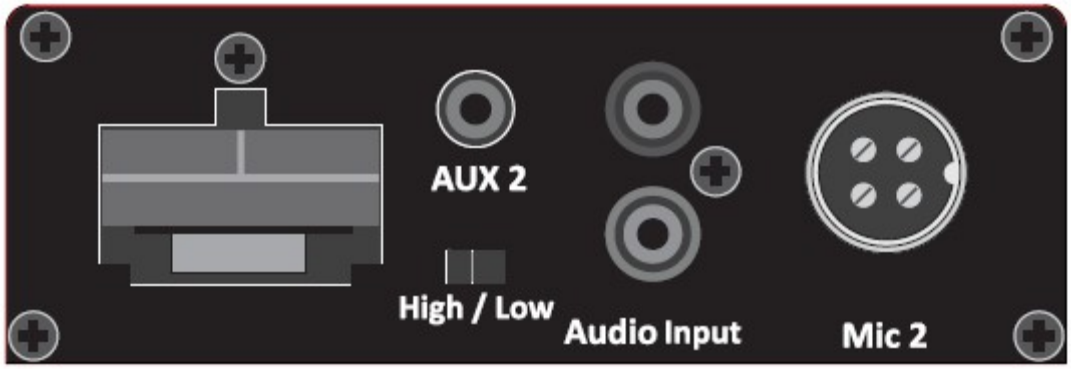

The PA for ALL applications!

IMPORTANT!

Please read ALL these key points to ensure the proper connection and use of your PA 64. If you have ANY questions, please call 1 888 724-5351 BEFORE proceeding!

The PA 64 should be installed by a professional installer, service mechanic, vehicle manufacturer or dealer. **Do not attempt to install the PA 64 without confirming compatibility with your vehicle manufacturer or authorized dealer.** Failure to do so may cause damage to you, the PA 64, your vehicle electrical system and possibly void your vehicle's warranty.

The PA 64 is an amplifier with audio and microphone inputs and is designed to be connected between the stereo's output and the vehicles speakers.

The PA 64 accepts speaker loads between 4 and 8 Ohms **ONLY!** Use of 2 Ohm speaker load will cause excessive heat and with continued use cause amplifier failure! Please refer to pages 5 – 8 for the "Speaker Connection Options" for proven and safe ways to connect multiple speakers together.

Although the PA 64 is internally fused, always ensure your power wires are fused at the power source, to protect the wires from shorts.

If your vehicle comes with a factory stereo, we recommend using one of our many T Harnesses for a plug and play installation. Please see our "Products Page" for the many versions available for popular vehicles.

If you are not 100% sure about the installation or application of the PA 64, please contact us at 1 888 724-5351. We are happy to answer ANY questions!

Ready2Talk (Double E Products Ltd.) is not responsible for any damage caused by misconnection, misuse or abuse of any *Ready2Talk* products.

Ready2Talk Limited Warranty

2 Year Limited Warranty on all PA Systems
1 Year Limited Warranty on all Cables and Microphones

Now with the important warnings out of the way… the fun stuff.

The PA 64 is designed to be the best PA system for all applications, offering a real amplifier with 4x50Watts (peak), solid state variable music muting, 2 x mic inputs and dual front & rear 3.5mm AUX inputs.

Use the PA 64 as a stand-alone PA system or connected to your factory (OEM) stereo, any aftermarket stereo, even an automated tour system.

The PA 64 can be mounted on any flat surface vertical, horizontal, even upside-down. With the included front decal, the printing will always be the right way around. We try to think of everything.

Want to hide it away? There are optional RME (Rear Mic Extensions) in 5 ft. (1.5m) and 20 ft. (6m) lengths.

With the two mic inputs, use any of our high performing mics from hand mics to headsets, wired or wireless. The perfect PA system for vans or busses for Sightseeing, Shuttle, Transit, School Bus, Church Busses, Retirement Homes, People Movers, Boats, Trolleys, Snow Cats and Horse Carriages. Did we forget anything? Bet ya it'll work there too.

We even have PA 64 wiring options for Multi Trailer Trams so you can couple or remove trailers without sending your audio system into a tail spin. Also diagrams for vehicles to meet ADA (Americans with Disabilities Act) and for automated announcement or recorded tour systems are available.

Ever wanted to add video to your vehicle, with the PA 64 it's easier than you might expect. Karaoke anyone? Absolutely, karaoke tours are starting to claim center stage and we can show you how to do that too!

Check out all the special use instructions on our "Tech Info" page at Ready2Talkpa.com, or just give us a call.

The PA 64 is easy to connect, easy to use and better sounding than any other PA you've heard before. Now, you too can sound like a radio DJ.
(Sound effects and annoying side kick not included)

Thanks for purchasing your PA 64, now go have fun with it.

Stereo Connection Options

Diagram 1 - Connection to Aftermarket Stereo RCA Outputs

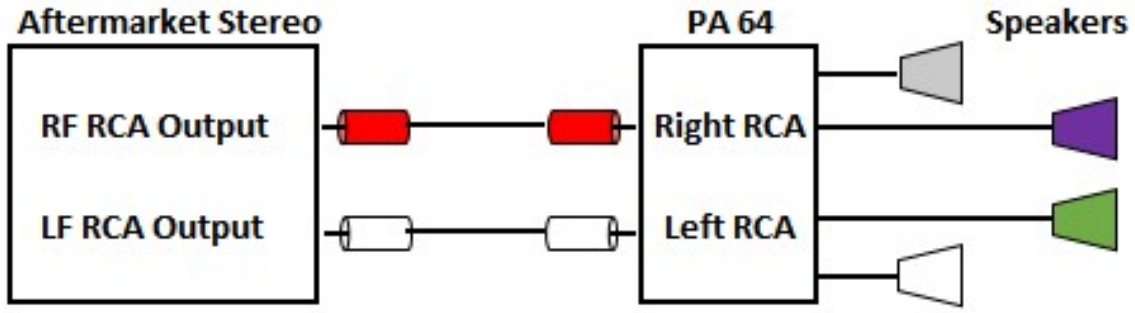

Note: Set Input Switch on PA 64 to **"Low"**

Note: When installed correctly, no speakers are connected to the stereo.

Diagram 2 - Connection to OEM Factory Stereo Speaker Wires

Use the RCA speaker wire pig tails included in the box. Or, we recommended using one of our plug and play installation T harnesses where possible to simplify the installation.

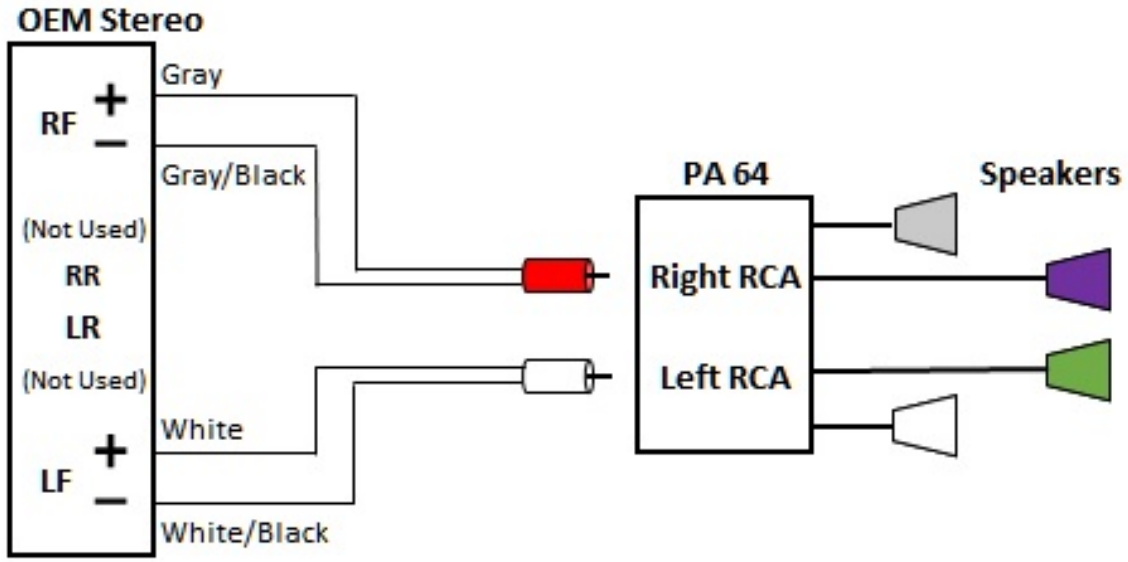

Note: Set Input Switch on PA 64 to **"High"**

Note: When connecting the stereo to the PA 64 using speaker wire to RCA pigtails, only the stereo's front output wires are connected to the PA 64. The stereo's rear output wires are left open and should be taped off for safety.

Note: When installed correctly, no speakers are connected to the stereo.

PA 64 Multi Pin Plug Wiring Code

12V + Battery	Yellow
12V + Switched	Red
12V – Ground	Black
Right Front +	Gray
Right Front -	Gray / Black
Left Front +	White
Left Front -	White / Black
Right Rear +	Purple
Right Rear -	Purple / Black
Left Rear +	Green
Left Rear -	Green / Black

Additional Wiring Info

Yellow 12V + Constant power - 10 Amp fuse in the multi wire socket base
Red 12V + Accessory power - Internal automatic re-settable fuse

Acc. Fuse Reset Instructions To reset the onboard accessory fuse, repair the short, then either unplug the main power plug or turn off the vehicles power for 10 seconds.

Note: Never increase the value of the 10A ATO fuse, as damage may occur.

Note: DO NOT EXCEED a 4 – 8 Ohm speaker impedance! If speaker the impedance is outside intended range, the PA 64 will get hot, blow the 10A power fuse and may fail, which is not covered by warranty.

Note: The PA 64 amplifier uses a floating output and is not bridgeable. Please ensure your speakers are not common grounded or connected to the vehicle ground as damage may occur, which is not covered by warranty.

Note: The PA 64 is designed to be connected between the stereo and the vehicles speakers. When the installation is complete, no speakers are connected to the stereo, all the speakers are connected to the PA 64.

Note: If you require more output power than the 4 x 50W the PA 64 offers, an additional speaker level input amplifier can easily be added. For more information, please call us 1 888 724-5351.

Speaker Connection Options

Note: All diagrams are drawn using 4 Ohm speakers and fall within 4–8 Ohms.

Normal 4 Speaker Option

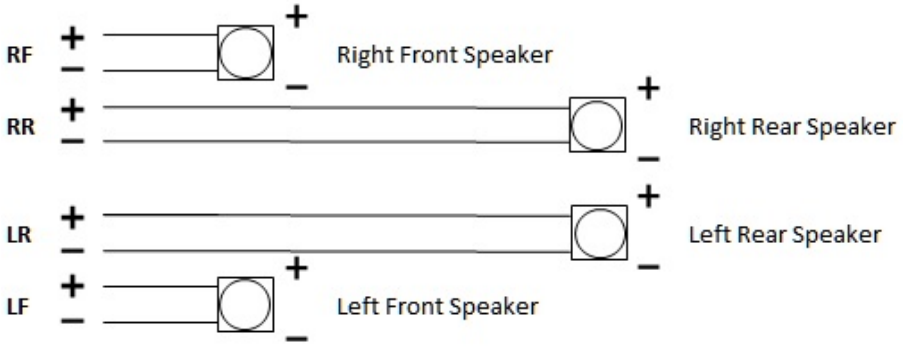

6 Speaker Option with Door Speakers

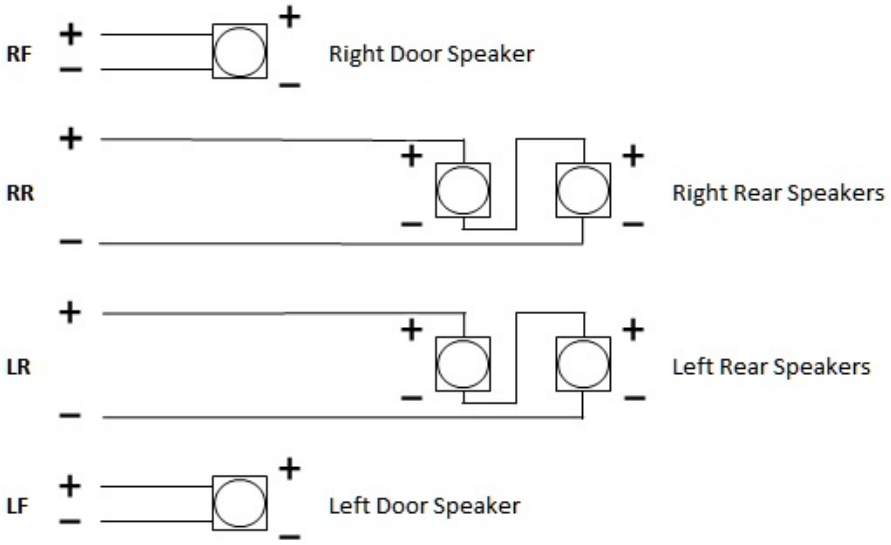

8 Speaker Option with Door Speakers

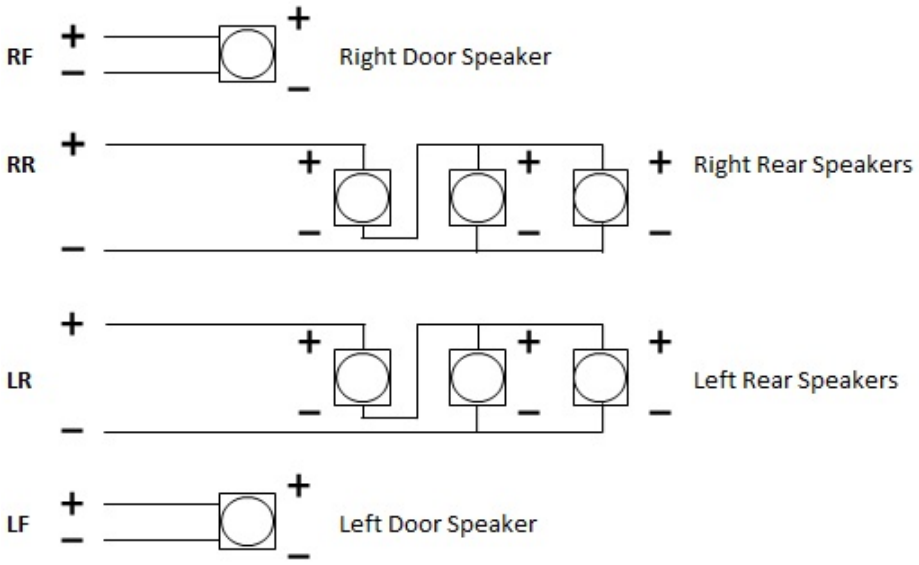

8 Speaker Option

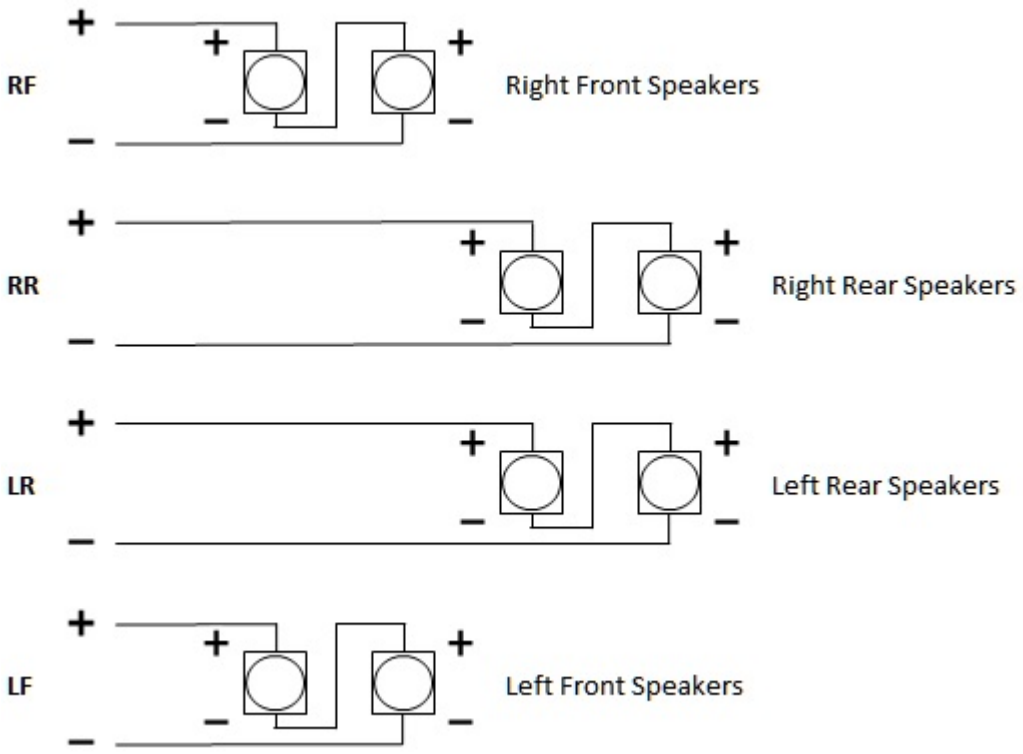

10 Speaker Option with Door Speakers

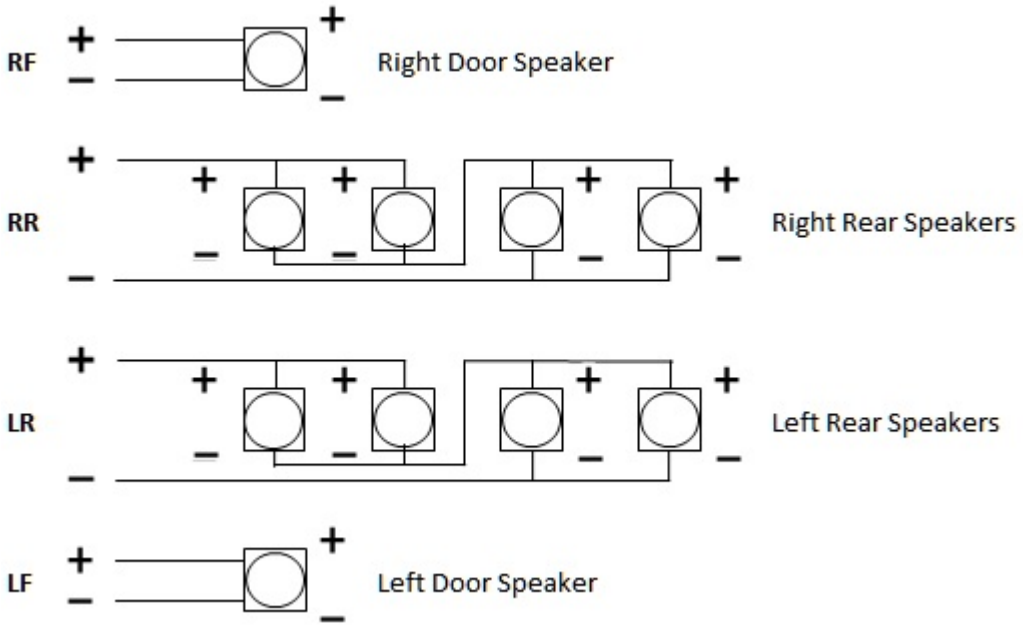

12 Speaker Option

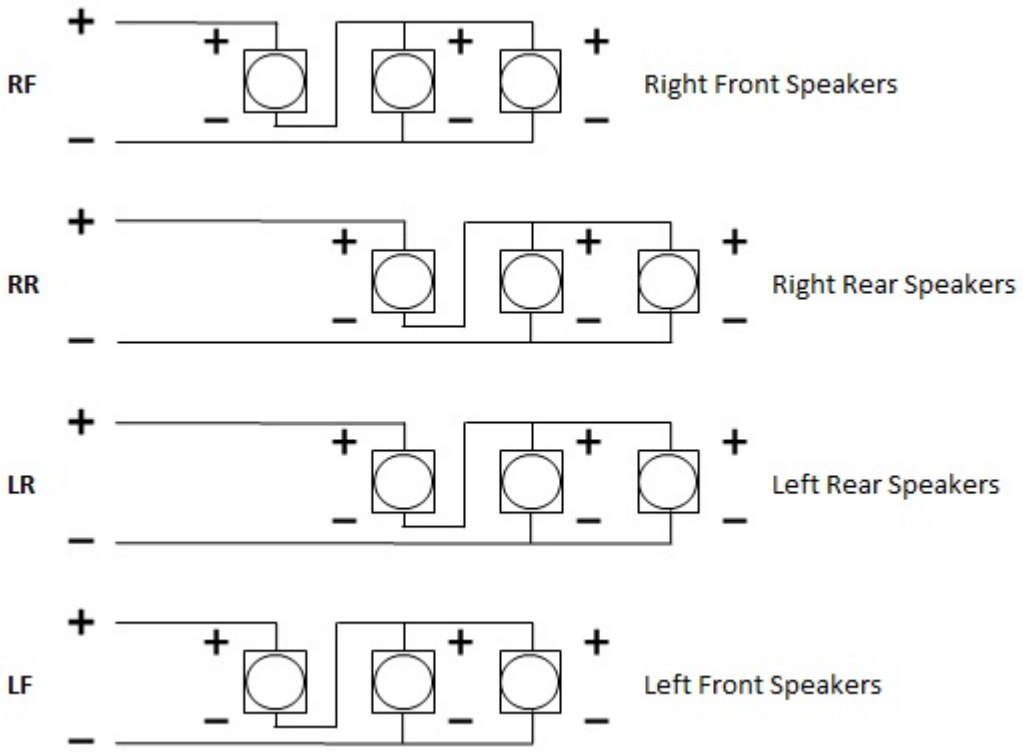

16 Speaker Option

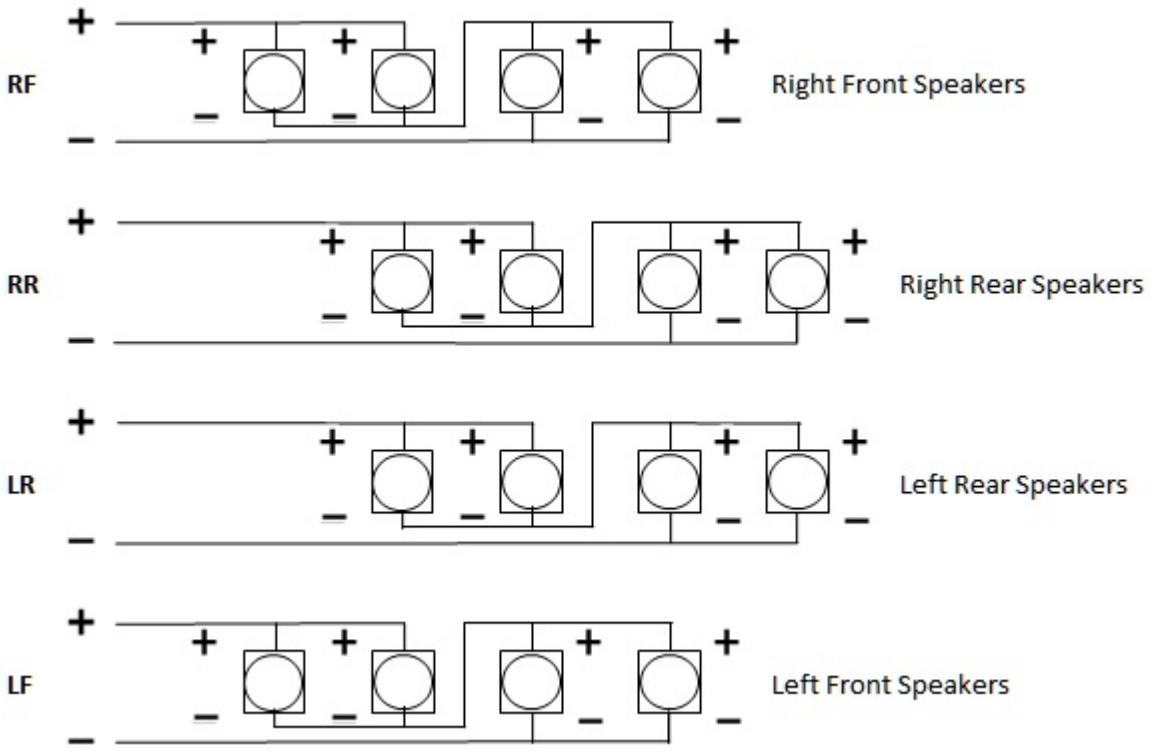

PA 64 Start Up and Initial Testing

1. Connect your microphone to either Mic 1 or Mic 2.

2. Turn on the vehicle and the power light on the front of the PA 64 will come on. With the stereo turned off, turn on the microphone, talk normally and adjust to the desired level using the "Volume" knob.

3. Turn off the mic, turn on the stereo and adjust the stereo volume as normal to desired level.

4. Set the "Audio Mute" knob on the front of the PA 64 to half way. (Nothing will happen yet)

5. Turn on the mic back and the radio volume will mute about 50% automatically. Turn the mic off and the radio will come back up to full volume.

6. You can pre-determine the amount of music muting just by turning the "Audio Mute" knob on the front of the PA 64. Full left = 0% muting, full right = 100% muting.

7. When playing music from your MP3 player through the front "AUX 1 or rear AUX 2 input", the muting will function the same as listed above in point #5 and #6.

Note: When using two mics, turning on either mic will trigger the music muting.

Note: Both the mic Volume or Audio Mute knobs will have no affect with the mic switch in the OFF position. This is normal.

Note: When connecting your MP3 player into the "AUX 1" or "AUX 2" inputs the sound will blend together with the stereo. So, it's recommended to turn off the stereo when using the "AUX input" so they don't compete.

Fine Adjustments - (see Image 1) To access, remove 2 x top screws on both the front and rear places, then remove the top cover.

Front channel level adjustment This allows the installer to lower the sound output of the front speakers in relation to the rear speakers. To reduce the front speaker volume, turn both pots equally counter clockwise.

Mic level Normally the mic levels are never adjusted. Should you need to adjust; to increase turn the pot clockwise, to reduce turn counter clockwise. Make small adjustments while talking (e.g. 1/8th turn) and then re-test.

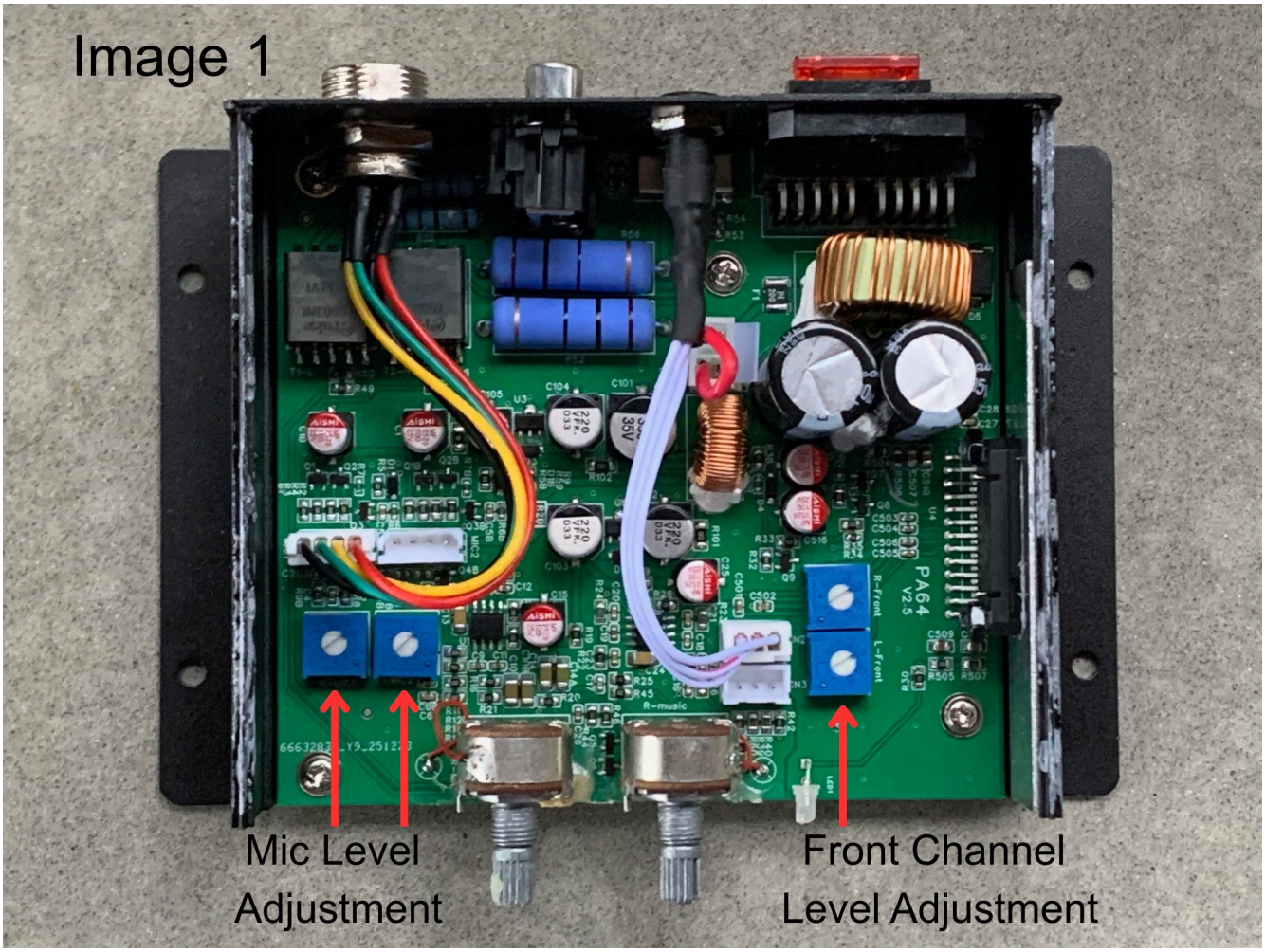

For more information

You can find us at

www.ready2talkpa.com

or give us a call at 1 888 724-5351

Options - Making the PA 64 "the PA system for ALL applications"

Optional Front Decal Depending on your vehicle, it may be best to mount the PA 64 either vertically or upside down. We have included an additional front label with reversed printing to show the correct way.

RME 5 and RME 20 Rear mic extension cables in 5 ft. and 20 ft. and include a small flush mounting plate with a 4 pin mic socket as a remote mic input.

PA 64 SPK A replacement PA 64 front plate with a manual On/Off switch.

PA FMP A flush mounting plate for in dash installations.

Installation T Harnesses We now offer many installation T harnesses for the most popular vehicles coming with factory OEM stereos. No more wire cutting, it's plug and play which saves time and money. Please check out our Products Page on *www.ready2talkpa.com*.

Headset Microphones

HS BT4 Digital Wireless Headset that offers over 30 ft. range with 12 hrs. continuous operation, but charges fully in a max of only 3 hrs.

HS 36 Anti-pop / Lightweight but durable condenser headset microphone including inline On/Off switch, with the wire and boom on LEFT side

HS 46 Anti-pop / Same as HS 36, with the wire and boom on RIGHT side

Hand Microphones

HM BT4 Digital Wireless Hand Mic that offers over 30 ft. range with 12 hrs. continuous operation, but charges fully in a max of only 3 hrs.

PHM 6C Anti-pop / Standard Push to Talk hand mic with rubber curly cord

HM 46M Anti-pop / Durable singers style hand mic with 12 ft. mic cable

Gooseneck Microphone

GN 26C Anti-pop / 20" (50cm) Condenser gooseneck mic with a dash mounted rocker switch

PA 64 Specifications - Ver.2.5

High Level Input	12VPP (peak to peak)
Low Level Input	450mV – 4V
AUX Input	400mV
Microphone Input	100mV
Max Current Drain (Yellow Power Wire)	10Amp
12V Switched Power (Red Wire)	250mA
Total Current Drain at Normal Volumes	2.5Amp
Standby Current Drain	30mA
Peak Power Output	4 x 50 Watts
RMS Power Output	4 x 22 Watts
Case Measurements (Including Flange)	H 1-5/8″ x W 5-5/8″ x D 4-1/8″
	H 42mm x W 143mm x D 105mm
Front Panel Measurements (Without Flange)	H 1-5/8″ x W 4-5/8″ x D 4-1/8″
	H 42mm x W 118mm x D 105mm

Manufactured for

Double E Products Ltd.
Box 16118 / 1199 Lynn Valley Rd
North Vancouver BC V7J 3S9 Canada
1 888 724-5351

www.ready2talkpa.com ***info@ready2talkpa.com***